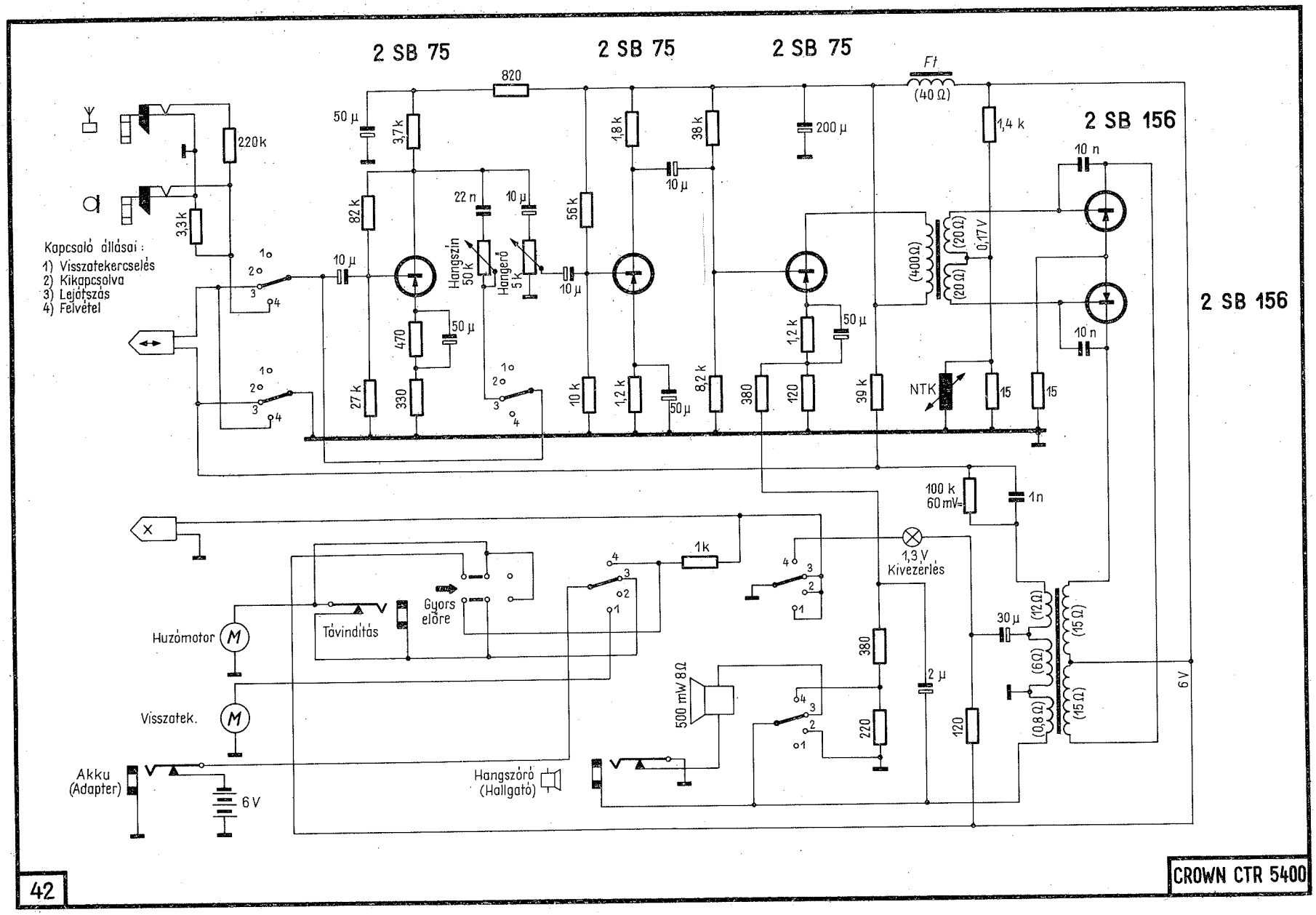

CROWN CTR 5400